EMULATION TECHNOLOGY, INC.

Specification Number: M6256

PROGRAMMING ADAPTER SPECIFICATION

Item: 4848056BG600

Description: AS-48-48-05BG-6

REPLACEMENT SOCKET: S-MBGA-6X8-48-J

Call Emulation Technology for a replacement socket price and delivery quote.

TYPICAL DIMENSIONS:

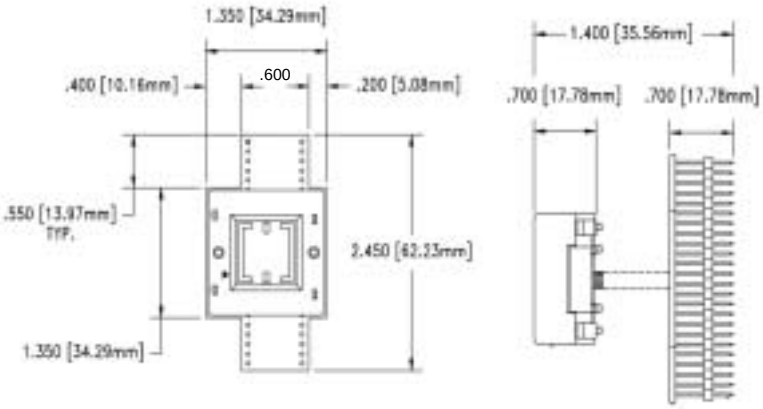

All Dimensions in Inches. (Assembly Drawing: F6256)

PACKAGE SPECIFICATIONS:

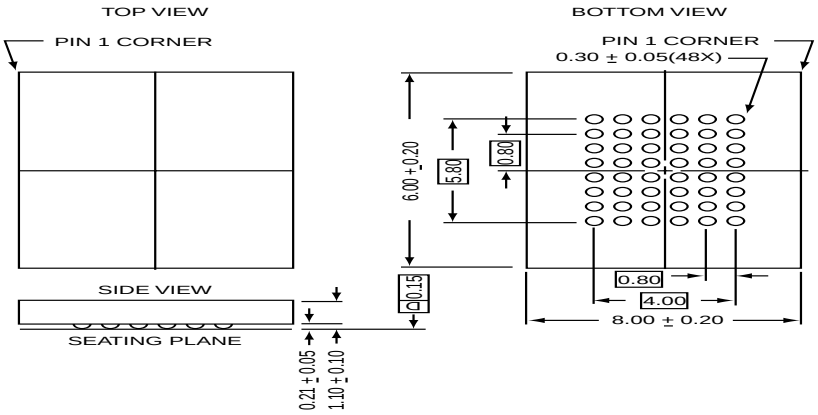

All Dimensions in Millimeters. ET Code: 048-6BG6X8

Compatible MBGA devices:

SST 39VF010-70-4C-B2K/B3K	SST 39LF400A-45-4C-B2K/B3K
SST 39VF010-90-4C-B2K/B3K	SST 39VF080-70-4C-B2K/B3K
SST 39LF010-45-\4C-B2K/B3K	SST 39VF080-90-4C-B2K/B3K
SST 39VF100-70-4C-B2K/B3K	SST 39VF080-90-4C-B2K/B3K
SST 39VF100-70-4C-B2K/B3K	SST 39VF800A-70-4C-B2K/B3K
SST 39LF100-35-4C-B2K/B3K	SST 39VF800A-90-4C-B2K/B3K
SST 39VF200A-70-4C-B2K/B3K	SST 39LF800A-55-4C-B2K/B3K
SST 39VF200A-90-4C-B2K/B3K	SST 39VF016-70-4C-B2K/B3K
SST 39LF200A-45-4C-B2K/B3K	SST 39VF016-90-4C-B2K/B3K
SST 39VF400A-70-4C-B2K/B3K	SST 39VF160-70-4C-B2K/B3K
SST 39VF400A-90-4C-B2K/B3K	SST 39VF160-90-4C-B2K/B3K

Manufacturers:

SILICON STORAGE TECHNOLOGY, INC.

CONNECTION TABLE:

MBGA SOCKET	Pin Names	DIP Base
F4	A15	1
F3	A14	2
F1	A13	3
F2	A12	4
E4	A11	5
E3	A10	6
E1	A9	7
E2	A8	8
D4	A19	9
NC	NC	10
D1	WE#	11
NC	NC	12
NC	NC	13
NC	NC	14
NC	NC	15
C3	A18	16
B2	A17	17
B1	A7	18
B3	A6	19
B4	A5	20
A2	A4	21
A1	A3	22
A3	A2	23
A4	A1	24
A5	A0	25
A6	CE#	26
A8	VSS	27
A7	OE#	28
B5	DQ0	29
B6	DQ8	30
B8	DQ1	31
B7	DQ9	32
C5	DQ8	33
C6	DQ16	34
C8	DQ3	35
C7	DQ11	36
D7	VDD	37
D8	DQ4	38
D6	DQ12	39
D5	DQ5	40
E7	DQ13	41
E8	DQ6	42
E6	DQ14	43
E5	DQ7	44
F7	DQ15	45
F8	VSS	46
F6	VDDQ/NC	47
F5	A16	48

EMULATION TECHNOLOGY, INC.

2344 WALSH AVENUE ◆ BUILDING F
SANTA CLARA, CA 95051-1301
TEL 408 / 982.0660 ◆ FAX 408 / 982.0664

Call today for a FREE Full Line Catalog and Unlimited Application Consulting!

Date: 4/02/01
Rev: MBGA
revised: 3/22/02

The Emulation Technology logo is a registered trademark of Emulation Technology, Inc.