EMULATION TECHNOLOGY, INC.
www.1800ADAPTER.com
1-800-ADAPTER(232-7837)

ADAPT-A-BOARD ®
Pin Maps

Specification #: M4438

Item: AB240QF62SP13W
Description: AB-240-QF62S-P13-W

Top View - QFP

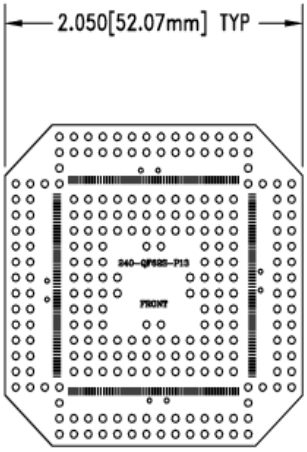

Side View

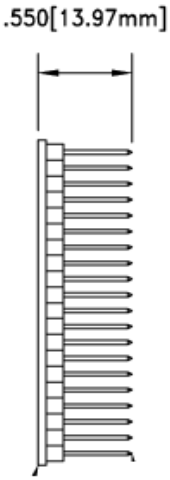

Bottom View

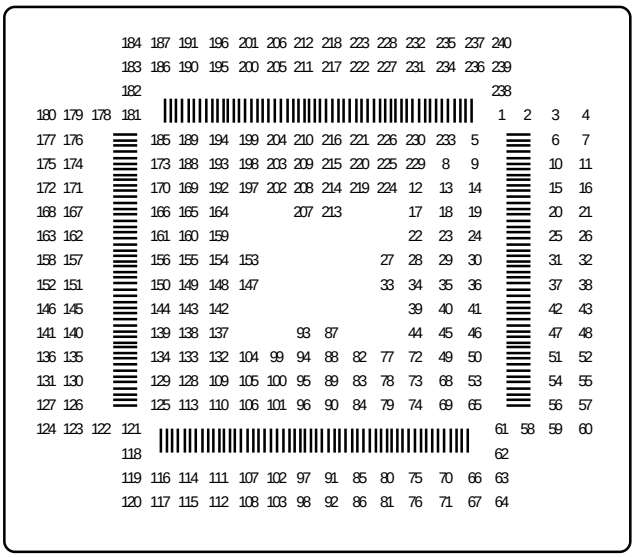

Note: Part # ID CODE FOR DRAWING IS: **240-QF62S-P13**

This adapter was built for the following package:

240 Pin

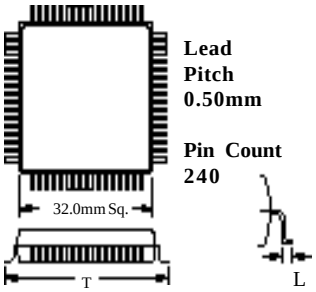

ET Footprint Code	Footprint Type	T = Tip to Tip Dimension (mm)	L = Foot Length (mm)
240-QF62A	A	35.9	0.8
240-QF62B	B	35.2	0.8
240-QF62	C	34.6	0.5
240-QF62D	D	34	0.5

Bottom Male Pin Types

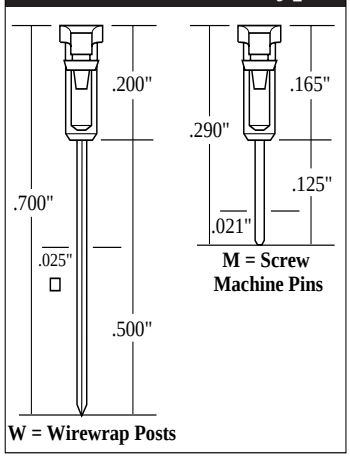

Page: 1 of 1
Rev: 2/08/00
Pkg.Type: QFP

The Emulation Technology logo is a trademark of Emulation Technology, Inc.
Adapt-A-Board is a registered trademark of Emulation Technology, Inc.