EMULATION TECHNOLOGY, INC.
www.1800ADAPTER.com
1-800-ADAPTER(232-7837)

ADAPT-A-BOARD ®
Pin Maps

Specification #: M4432

Item: AB160QF48SCW
Description: AB-160-QF48S-C-W

Top View - QFP

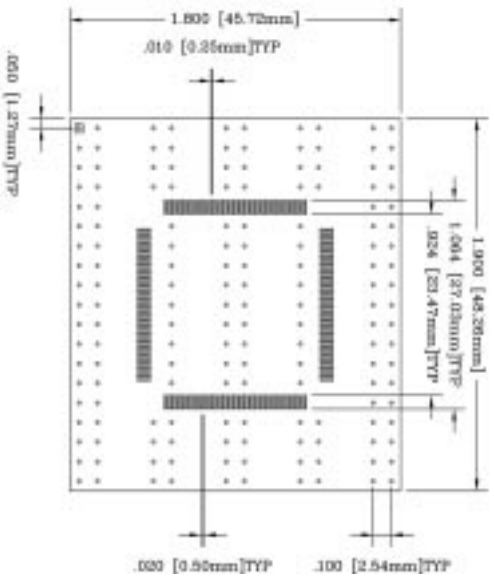

Side View

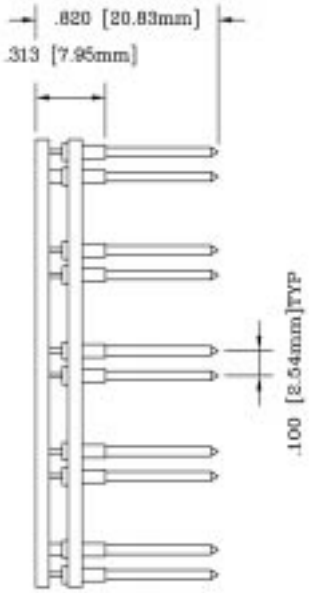

Bottom View

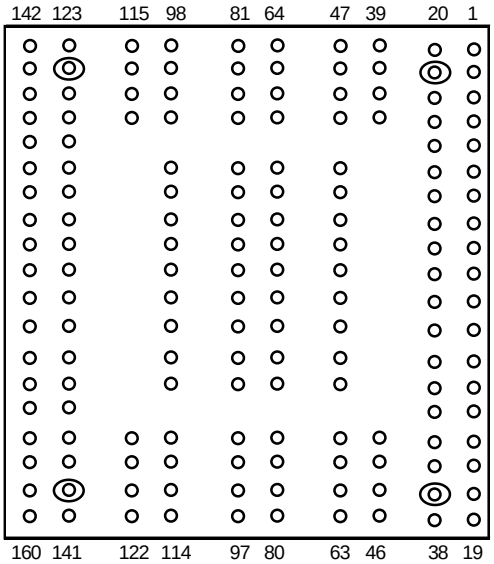

Note: Part # ID CODE FOR DRAWING IS: **160-QF48S-C**

This adapter was built for the following package:

160 Pin

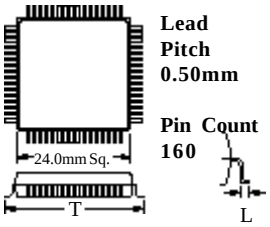

Lead Pitch 0.50mm

Pin Count 160

ET Footprint Code	Footprint Type	T = Tip to Tip Dimension (mm)	L = Foot Length (mm)
160-QF48A	A	27.9	0.8
160-QF48B	B	27.2	0.8
160-F48C	C	26.6	0.5
160-QF48	D	26	0.5

Bottom Male Pin Types

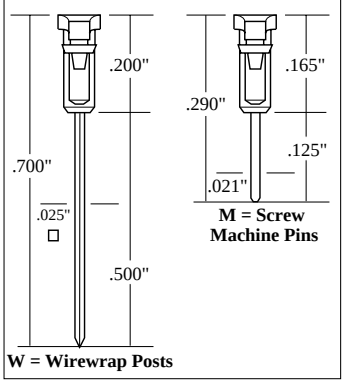

The Emulation Technology logo is a trademark of Emulation Technology, Inc.
Adapt-A-Board is a registered trademark of Emulation Technology, Inc.

EMULATION TECHNOLOGY, INC.
www.1800ADAPTER.com
1-800-ADAPTER(232-7837)

ADAPT-A-BOARD ®
Pin Maps

Specification #: M4432

Item: AB160QF48SCW
Description: AB-160-QF48S-C-W

Connection Table:

QFP	Base	QFP	Base	QFP	Base	QFP	Base	QFP	Base	QFP	Base
1	51	24	12	47	57	70	106	93	155	116	143
2	20	25	31	48	45	71	113	94	135	117	124
3	1	26	13	49	56	72	107	95	154	118	142
4	21	27	32	50	62	73	121	96	134	119	123
5	2	28	14	51	72	74	108	97	153	120	102
6	22	29	33	52	63	75	112	98	133	121	115
7	3	30	15	53	80	76	120	99	152	122	118
8	23	31	34	54	73	77	109	100	132	123	101
9	4	32	16	55	79	78	111	101	151	124	103
10	24	33	35	56	74	79	119	102	150	125	117
11	5	34	17	57	77	80	122	103	131	126	100
12	25	35	36	58	76	81	110	104	149	127	104
13	6	36	18	59	78	82	141	105	130	128	116
14	26	37	37	60	75	83	160	106	148	129	105
15	7	38	19	61	92	84	140	107	129	130	99
16	27	39	38	62	95	85	159	108	147	131	89
17	8	40	59	63	93	86	139	109	128	132	98
18	28	41	46	64	94	87	158	110	146	133	81
19	9	42	43	65	91	88	138	111	127	134	88
20	29	43	60	66	96	89	157	112	145	135	82
21	10	44	58	67	90	90	137	113	126	136	87
22	11	45	44	68	97	91	156	114	144	137	84
23	30	46	61	69	114	92	136	115	125	138	85

The Emulation Technology logo is a trademark of Emulation Technology, Inc.
Adapt-A-Board is a registered trademark of Emulation Technology, Inc.