EMULATION TECHNOLOGY, INC.

Specification Number: M3144

PROGRAMMING ADAPTER SPECIFICATION

Item: 282405P300-YAM/600-YAM

Description: AS-28-24-05P-3-YAM/6-YAM

REPLACEMENT SOCKET: **S-PCC-00-028-B**

Call Emulation Technology for a replacement socket price and delivery quote.

TYPICAL DIMENSIONS:

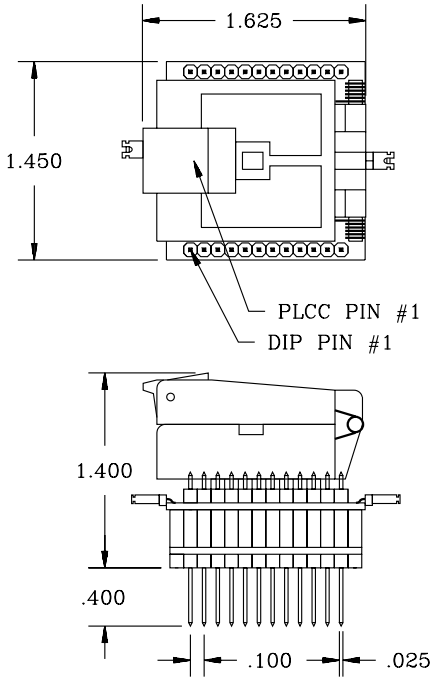

All Dimensions in Inches. (Assembly Drawing: F3144)

CONNECTION TABLE:

28-Lead PLCC SOCKET	24-Pin DIP Base
1	NC
2	1
3	2
4	3
5	4
6	5
7	6
8	NC
9	7
10	8
11	9
12	10
13	11
14	12
15	NC
16	13
17	14
18	15
19	16
20	17
21	18
22	NC
23	19
24	20
25	21
26	22
27	23
28	24

PACKAGE SPECIFICATIONS:

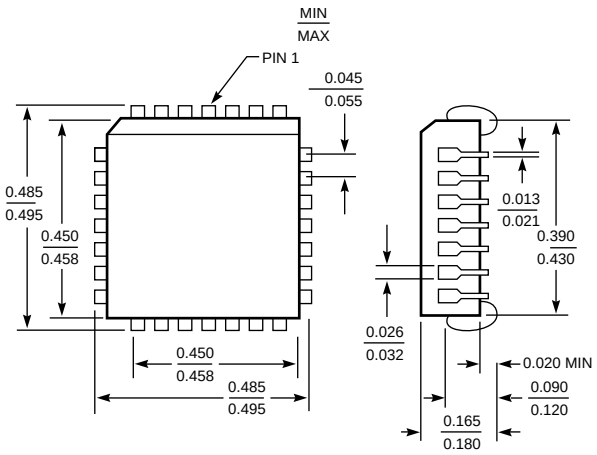

All Dimensions in Inches. **ET Code: 028-PCC6**

Note: JEDEC-PLCC Pinout No-Connections are Pins 1, 8, 15, and 22.

Compatible PLCC devices:

12L10	20RP8	EPM6032	TIBPLA507M/C
14R21	20RP10	GAL6001	TIFPLA839M/C
PLS167	20V8	GAL20Z8	TIBPLA840M/C
PLS168	20X8	GAL22V10	TIBPLS506M/C
20L2	20X10	PLC473	TIB82S167BC
20L8	20XRP10	PLHS473	
20L10	22P10	PLUS20L8	
20L8FN	22RX8	PLUS20R4	
20R4	22V10	PLUS20R6	
20R6	22V10/B/C/D	PLUS20R8	
20R8	22U10	TIBPAL19R4/A	
20R4FN	22UP10	TIBPALR19L8/A	
20R6FN	29M16	TIBPALR19R4/A	
20R8FN	29MA16	TIBPALR19R6/A	
20RA10FN	32VX10	TIBPALT19R6/A	
20RP6	CG7C324	TIBPALT19R8/A	

Manufacturers:

AMD	National Semiconductor
ATMEL	Philips/Signetics
Cypress Semiconductor	Texas Instruments
Harris Semiconductor	VLSI Technology
Lattice	

EMULATION TECHNOLOGY, INC.

2344 Walsh Avenue ◆ Building F
Santa Clara, CA 95051-1301
Tel 408 / 982.0660 ◆ Fax 408 / 982.0664

Call today for a FREE Full Line Catalog and Unlimited Application Consulting!

Date: 4/11/00
Rev: C

The Emulation Technology logo is a registered trademark of Emulation Technology, Inc.