EMULATION TECHNOLOGY, INC.

Specification Number: M2254

PROGRAMMING ADAPTER SPECIFICATION

Item: 882801PGA6PAC

Description: AS-88-28-01PGA-6 (FOR PAC1000)

REPLACEMENT SOCKET: S-PGA-13-088-A

Call Emulation Technology for a replacement socket price and delivery quote.

TYPICAL DIMENSIONS:

Note: DIP base is .600" wide

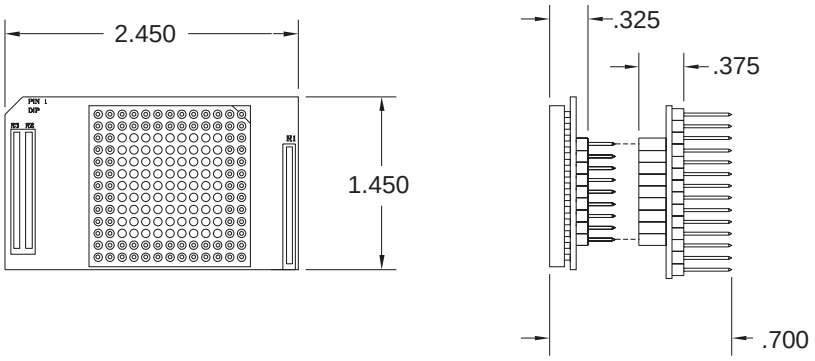

All Dimensions in Inches.

(Assembly Drawing: F2254)

PACKAGE SPECIFICATIONS:

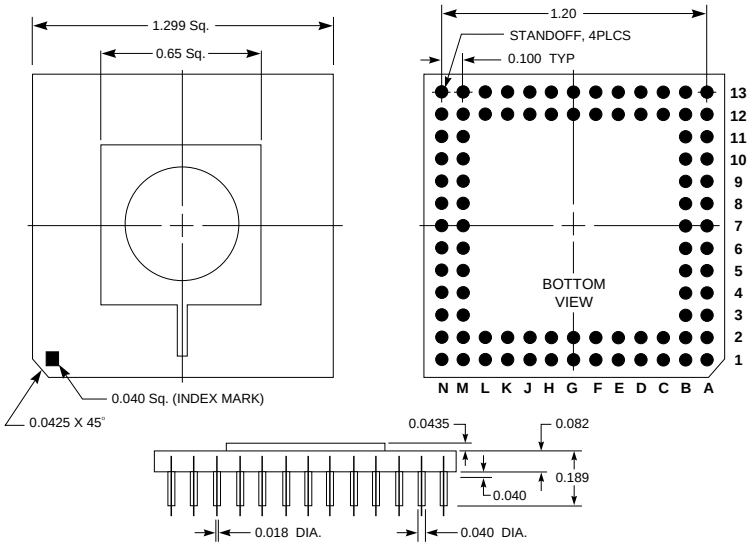

All Dimensions in Inches.

Note: All exposed metal and pins are gold plated.

Compatible PGA device: PAC1000

Manufacturer: WSI

CONNECTION TABLE:

88-Pin PGA PIN OUT	PIN Names	88-Pin PGA PIN OUT	28-Pin DIP PIN Names
A1	PULL-UP	N13	PULL-UP
B1	PULL-UP	M13	VCC
C2	PULL-UP	L12	27
C1	7	L13	VCC
D2	PULL-UP	K12	PULL-UP
D1	PULL-UP	K13	PULL-UP
E2	PULL-UP	J12	PULL-UP
E1	PULL-UP	J13	PULL-UP
F2	26	H12	PULL-UP
F1	19	H13	PULL-UP
G2	21	G12	PULL-UP
G1	VCC	G13	PULL-UP
H2	GND	F13	PULL-UP
H1	23	F12	GND
J2	N.C.	E13	PULL-UP
J1	N.C.	E12	PULL-UP
K2	N.C.	D13	PULL-UP
K1	N.C.	D12	PULL-UP
L2	N.C.	C13	PULL-UP
L1	GND	C12	PULL-UP
M2	N.C.	B13	VCC
M1	N.C.	B12	VCC
N2	10	A13	VCC
N1	9	A12	VCC
M3	8	B11	VCC
N3	GND	A11	VCC
M4	6	B10	VCC
N4	5	A10	VCC
M5	4	B9	20
N5	3	A9	11
M6	2	B8	25
N6	24	A8	22
M7	VCC	B7	N.C.
N7	VCC	A7	N.C.
N8	VCC	A6	N.C.
M8	VCC	B6	1
N9	VCC	A5	N.C.
M9	VCC	B5	N.C.
N10	VCC	A4	N.C.
M10	13	B4	N.C.
N11	GND	A3	GND
M11	VCC	B3	N.C.
N12	VCC	A2	N.C.
M12	VCC	B2	VCC

Note: PULL-UP = Tied to pull up resistor (3.3K) to VCC.

VCC = Tie to VCC — VCC: Pin 28

N.C. = No connection — GND: Pin 14

EMULATION TECHNOLOGY, INC.

2344 WALSH AVENUE ◆ BUILDING F
SANTA CLARA, CA 95051-1301
TEL 408/982.0660 ◆ FAX 408/982.0664

Call today for a FREE Full Line Catalog and Unlimited Application Consulting!

Date: 4/5/00
Rev: C

The Emulation Technology logo is a registered trademark of Emulation Technology, Inc.