EMULATION TECHNOLOGY, INC.

Specification Number: M2238

PROGRAMMING ADAPTER SPECIFICATION

Item: 404001D600
Description: AS-40-40-01D-6

REPLACEMENT SOCKET: **S-DIP-00-040-AZ**
Call Emulation Technology for a replacement socket price and delivery quote.

TYPICAL DIMENSIONS:

Note: DIP base is .600" wide

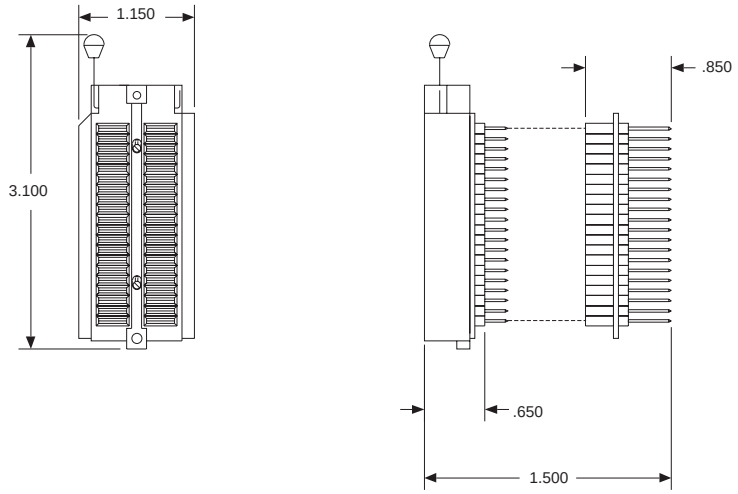

All Dimensions in Inches. (Assembly Drawing: (F2238))

PACKAGE SPECIFICATIONS:

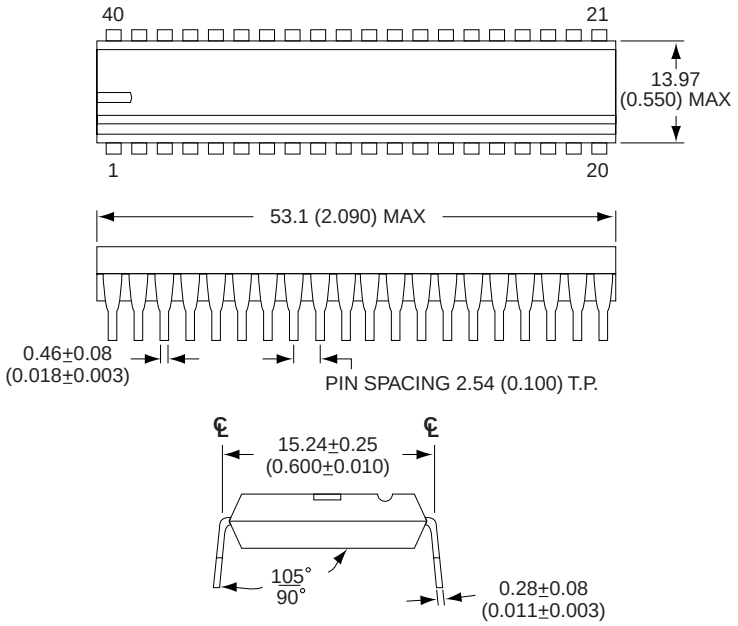

All Dimensions in Millimeters and Inches.

CONNECTION TABLE:

27C400 40-Lead DIP SOCKET	27C400 PIN Names	27C240 40-Pin DIP Base
1	A17	39
2	A7	28
3	A6	27
4	A5	26
5	A4	25
6	A3	24
7	A2	23
8	A1	22
9	A0	21
10	CE	2
11	GND	11
12	OE	20
13	O0	19
14	O8	10
15	O1	18
16	O9	9
17	O2	17
18	O10	8
19	O3	16
20	O11	7
21	VCC	40
22	O4	15
23	O12	6
24	O5	14
25	O13	5
26	O6	13
27	O14	4
28	O7	12
29	O15/A-1	3
30	GND	30
31	BYTE/VPP	1
32	A16	38
33	A15	37
34	A14	36
35	A13	35
36	A12	34
37	A11	33
38	A10	32
39	A9	31
40	A8	29

Compatible TQFP devices: 27C400*
Manufacturer: Intel

Note: * Converts 27C400 to 27C240 Pinout.

Programmer: All, supporting 27C240 DIP

EMULATION TECHNOLOGY, INC.
2344 WALSH AVENUE ◆ BUILDING F
SANTA CLARA, CA 95051-1301
TEL 408 / 982.0660 ◆ FAX 408 / 982.0664

Call today for a FREE Full Line Catalog and Unlimited Application Consulting!

Date: 4/6/00
Rev: B

The Emulation Technology logo is a registered trademark of Emulation Technology, Inc.