EMULATION TECHNOLOGY, INC.
www.1800ADAPTER.com
1-800-ADAPTER(232-7837)

ADAPT-A-BOARD ®
Pin Maps

Specification #: M1816

Item: ABAB100QF49SP3W
Description: AB-100-QF49S-P3-W

Top View - QFP **Side View** **Bottom View - Base**

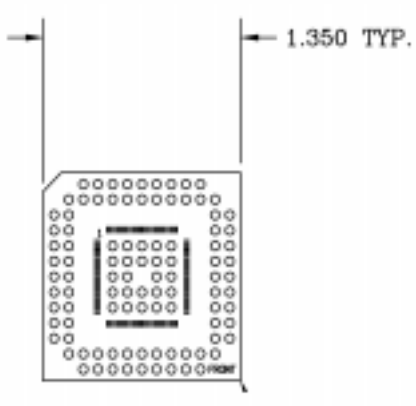

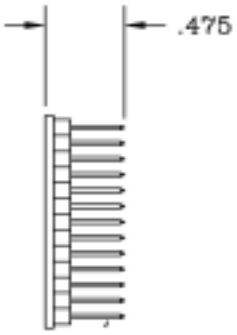

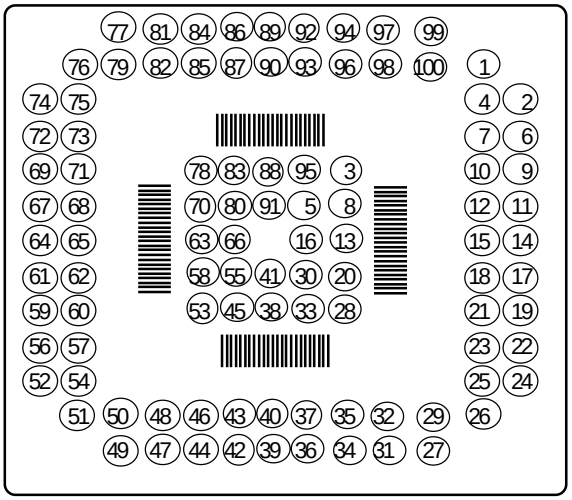

Note: - Part # ID CODE FOR DRAWING IS: **100-QF49-P3**
- Pin 1 of socket is at Top - Left Corner.

This adapter was built for the following package:

100 Pin

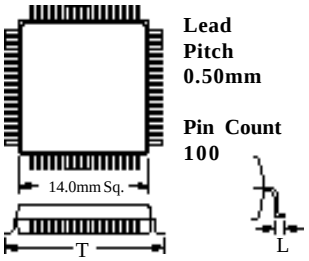

Lead Pitch 0.50mm

Pin Count 100

ET Footprint Code	Footprint Type	T = Tip to Tip Dimension (mm)	L = Foot Length (mm)
100-QF49A	A	17.9	0.8
100-QF49B	B	17.2	0.8
100-QF49C	C	16.6	0.5
100-QF49	D	16	0.5

Bottom Male Pin Types

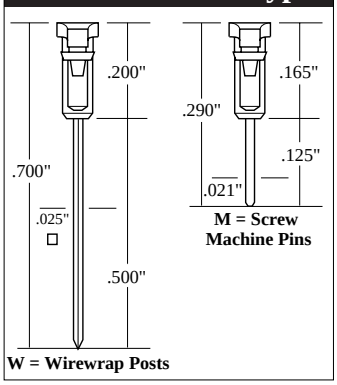

The Emulation Technology logo is a trademark of Emulation Technology, Inc.
Adapt-A-Board is a registered trademark of Emulation Technology, Inc.