EMULATION TECHNOLOGY, INC.
www.1800ADAPTER.com
1-800-ADAPTER(232-7837)

ADAPT-A-BOARD ®
Pin Maps

Specification #: M1473

Item: AB208QF21ZP14M1A
Description: AB-208-QF21CZ-P14-M-1

Top View - QFP **Side View** **Bottom View**

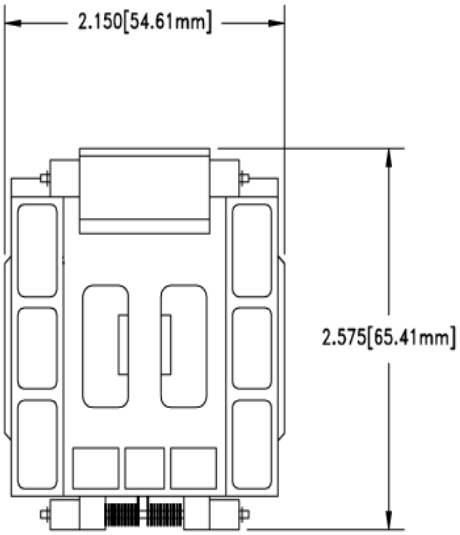

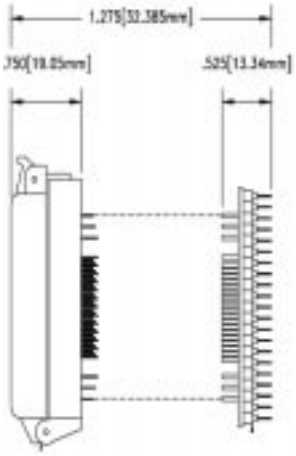

					158	159	164	170	176	182	188	197	199	203	204				
					162	161	167	173	179	185	191	194	200	201	206				
				160												207	202		
		150	156	157												205	208		
		155	153														1	4	
152	154				163	166	171	175	180	184	189	193	196	198	7				6	2
151	149				146	165	169	174	178	183	187	192	195	9	10				5	3
147	148				144	143	168	172	177	181	186	190	12	13	15				11	8
145	142				141	140	138						16	18	19				17	14
136	139				137	135	134						21	22	24				23	20
130	133				132	131	129						25	27	28				29	26
124	127				128	126	125						30	31	33				35	32
118	121				123	122	120						34	36	37				38	41
112	115				119	117	116	86	82	77	73	68	64	39	40				44	43
107	109				114	113	91	88	83	79	74	70	65	61	42				45	47
106	110				111	94	92	89	85	80	76	71	67	62	59				50	48
		108	105														49	51		
			104	101												53	52	46		
			98	103												56				
					102	97	96	90	87	81	75	69	63	57	58					
					100	99	95	93	84	78	72	66	60	55	54					

Note: Part # ID CODE FOR DRAWING IS: **208-QF21Z-P14**

This adapter was built for the following package:

208 Pin

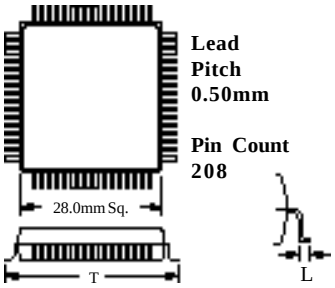

ET Footprint Code	Footprint Type	T = Tip to Tip Dimension (mm)	L = Foot Length (mm)
208-QF21A	A	31.9	0.8
208-QF21B	B	31.2	0.8
208-QF21	C	30.6	0.5
208-QF21D	D	30	0.5

Bottom Male Pin Types

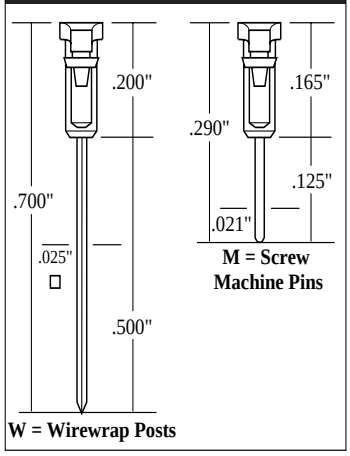

The Emulation Technology logo is a trademark of Emulation Technology, Inc.
Adapt-A-Board is a registered trademark of Emulation Technology, Inc.