REV	DESCRIPTION	DATE	BY
A	NEW DRAWING	9/14/99	J.G.
B	UPDATED DRAWING&PINMAP PAGE#3	07/09/01	H.N.

F5187

DOD 35187

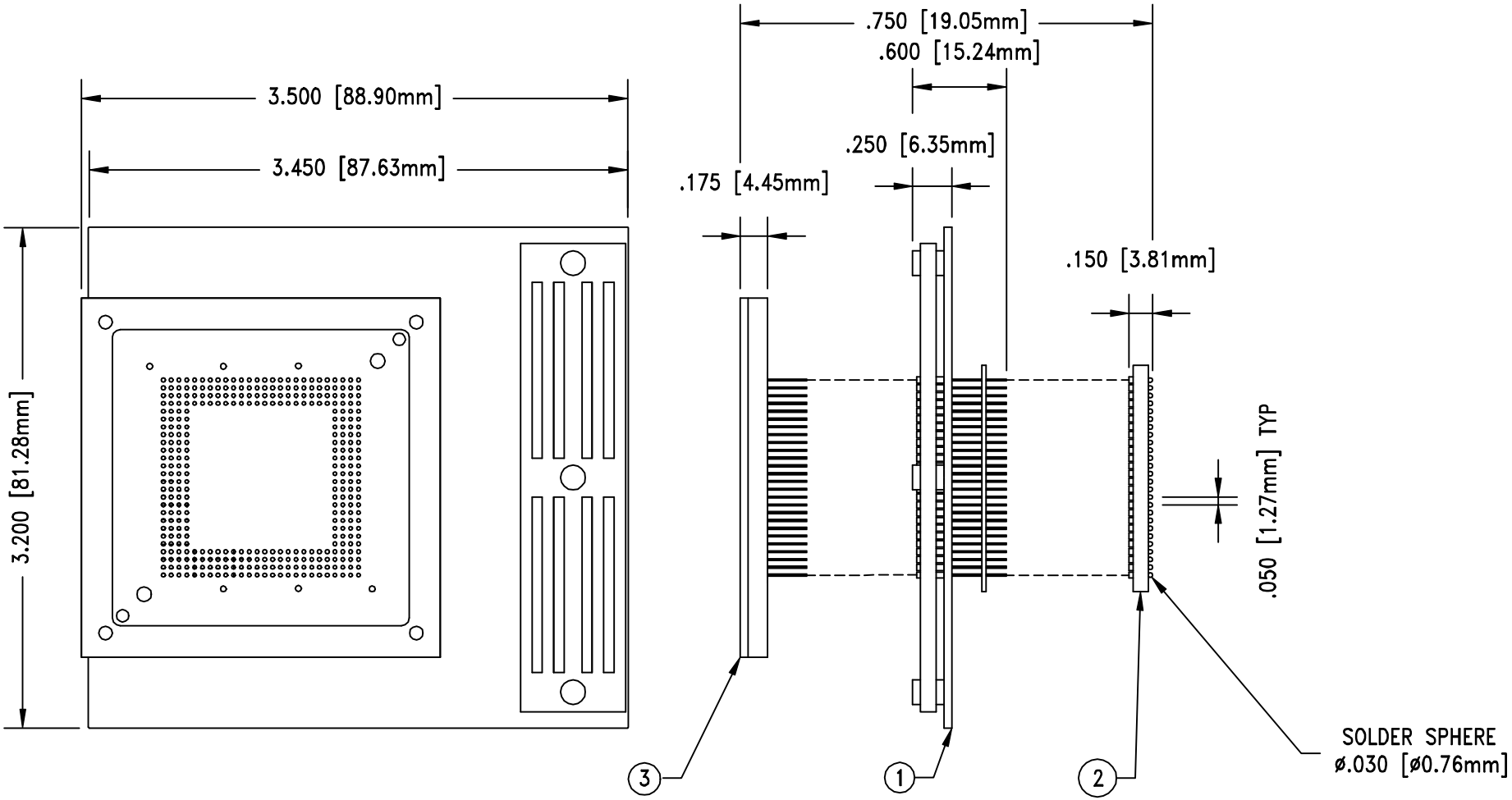

NO.	ITEM	DESCRIPTION	QTY.
1	AX-0352-I960RP	TOP SUB ASSEMBLY	1
2	BPE-352-2-026-B	BOTTOM SUB ASSEMBLY	1
3	SR-BGA-26-352-A	PLUG TOP OF #1	1

ALL DIMENSIONS ARE IN INCHES UNLESS OTHERWISE SPECIFIED

Emulation Technology, Inc.
VLSI and SMT ADAPTERS and ACCESSORIES
2344 Walsh Avenue, Bldg. F
Santa Clara, Ca 95051
TEL:(408)982-0660
FAX:(408)982-0664

SHEET: 1 OF 3 | DATE: 07/09/01 | REVISION: B

ASSEMBLY DRAWING

CHECKED: Perry Munroe | DRAWN: JAMES GOUVEIA

ITEM: BC-VI-2-26ZS1BT

DO NOT SCALE DRAWING

DESCRIPTION: BCP-0352-2BG026Z-I960RP-1-BL

F4181

DOD 34181

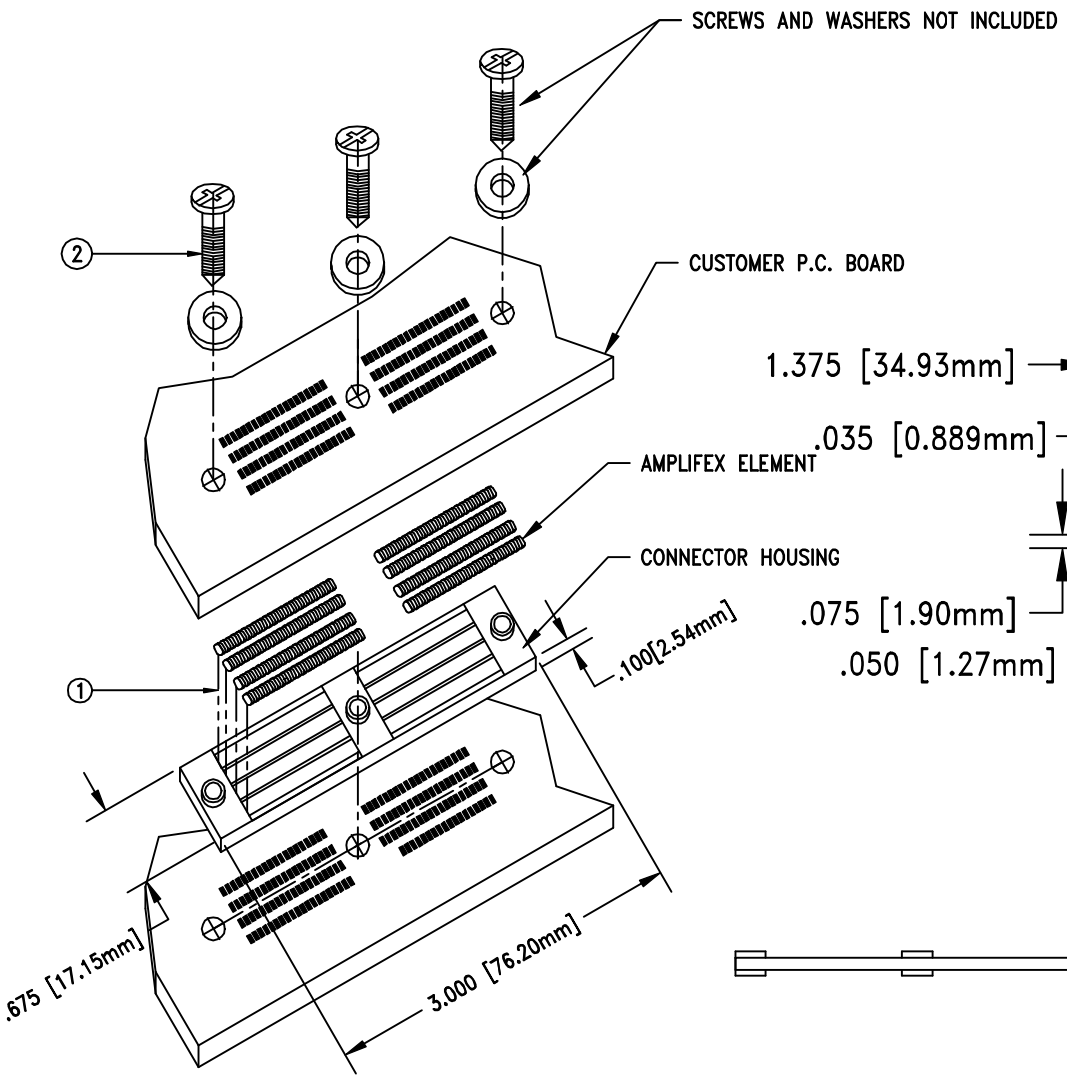

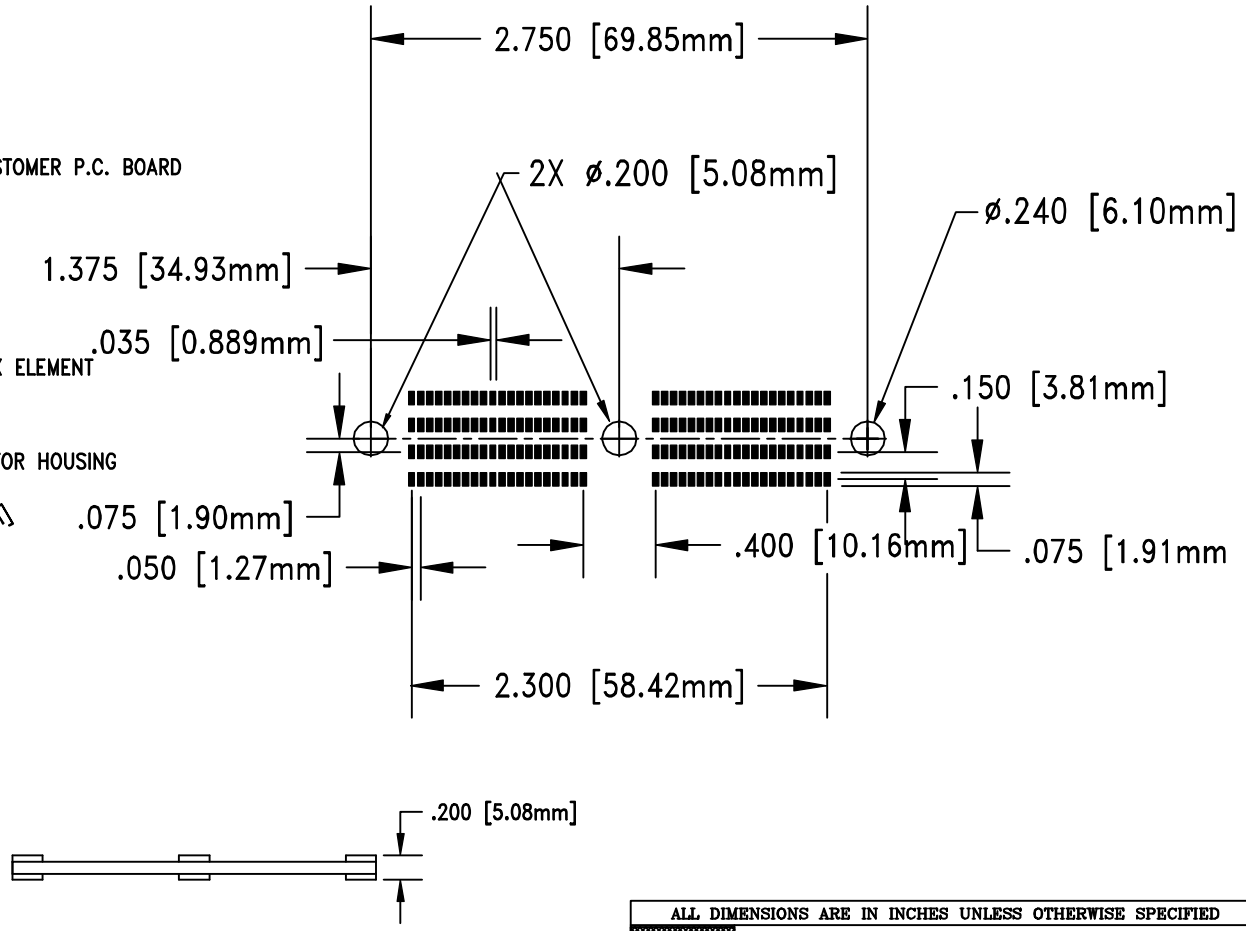

NOTES:

1. COMPONENT MOUNTS FLUSH IN BETWEEN BOARDS. USE OUTSIDE DIMENSIONS AS KEEPOUT AREA.
2. MAKE SURE THERE IS KEEPOUT FOR ALL COMPONENTS THAT ARE USED IN THIS ASSEMBLY.

ALL DIMENSIONS ARE IN INCHES UNLESS OTHERWISE SPECIFIED

Emulation Technology, Inc.
VLSI and SMT ADAPTERS and ACCESSORIES
2344 Walsh Avenue, Bldg. F
Santa Clara, Ca 95051
TEL:(408)982-0660
FAX:(408)982-0664

SHEET: 2 OF 2	DATE: 6-21-96	REVISION:	ASSEMBLY DRAWING
CHECKED: MICHAEL GARBER	DRAWN: Perry Munroe		ITEM: EL1604ROWCON
DO NOT SCALE DRAWING			DESCRIPTION: EL-160-4ROW-CON

																										D1	C1	B1	A1
																										D2	C2	B2	A2
																										D3	C3	B3	A3
																										D4	C4	B4	A4
																										D5	C5	B5	A5
																										D6	C6	B6	A6
																										D7	C7	B7	A7
AF1	AE1	AD1	AC1	AB1	AA1	Y1	W1	V1	U1	T1	R1	P1	N1	M1	L1	K1	J1	H1	G1	F1	E1	D1	C1	B1	A1		D8	C8	B8	A8
AF2	AE2	AD2	AC2	AB2	AA2	Y2	W2	V2	U2	T2	R2	P2	N2	M2	L2	K2	J2	H2	G2	F2	E2	D2	C2	B2	A2		D9	C9	B9	A9
AF3	AE3	AD3	AC3	AB3	AA3	Y3	W3	V3	U3	T3	R3	P3	N3	M3	L3	K3	J3	H3	G3	F3	E3	D3	C3	B3	A3		D10	C10	B10	A10
AF4	AE4	AD4	AC4	AB4	AA4	Y4	W4	V4	U4	T4	R4	P4	N4	M4	L4	K4	J4	H4	G4	F4	E4	D4	C4	B4	A4		D11	C11	B11	A11
AF5	AE5	AD5	AC5																			D5	C5	B5	A5		D12	C12	B12	A12
AF6	AE6	AD6	AC6																			D6	C6	B6	A6		D13	C13	B13	A13
AF7	AE7	AD7	AC7																			D7	C7	B7	A7		D14	C14	B14	A14
AF8	AE8	AD8	AC8																			D8	C8	B8	A8		D15	C15	B15	A15
AF9	AE9	AD9	AC9																			D9	C9	B9	A9		D16	C16	B16	A16
AF10	AE10	AD10	AC10																			D10	C10	B10	A10		D17	C17	B17	A17
AF11	AE11	AD11	AC11																			D11	C11	B11	A11		D18	C18	B18	A18
AF12	AE12	AD12	AC12																			D12	C12	B12	A12		D19	C19	B19	A19
AF13	AE13	AD13	AC13																			D13	C13	B13	A13		D20	C20	B20	A20
AF14	AE14	AD14	AC14						**PIN MAP**													D14	C14	B14	A14					
AF15	AE15	AD14	AC15						**BCP-0352-2BG026Z-I960RP-1-BL**													D15	C15	B15	A15					
AF16	AE16	AD16	AC16																			D16	C16	B16	A16		D21	C21	B21	A21
AF17	AE17	AD17	AC17																			D17	C17	B17	A17		D22	C22	B22	A22
AF18	AE18	AD18	AC18																			D18	C18	B18	A18		D23	C23	B23	A23
AF19	AE19	AD19	AC19																			D19	C19	B19	A19		D24	C24	B24	A24
AF20	AE20	AD20	AC20																			D20	C20	B20	A20		D25	C25	B25	A25
AF21	AE21	AD21	AC21																			D21	C21	B21	A21		D26	C26	B26	A26
AF22	AE22	AD22	AC22																			D22	C22	B22	A22		D27	C27	B27	A27
AF23	AE23	AD23	AC23	AB23	AA23	Y23	W23	V23	U23	T23	R23	P23	N23	M23	L23	K23	J23	H23	G23	F23	E23	D23	C23	B23	A23		D28	C28	B28	A28
AF24	AE24	AD24	AC24	AB24	AA24	Y24	W24	V24	U24	T24	R24	P24	N24	M24	L24	K24	J24	H24	G24	F24	E24	D24	C24	B24	A24		D29	C29	B29	A29
AF25	AE25	AD25	AC25	AB25	AA25	Y25	W25	V25	U25	T25	R25	P25	N25	M25	L25	K25	J25	H25	G25	F25	E25	D25	C25	B25	A25		D30	C30	B30	A30
AF26	AE26	AD26	AC26	AB26	AA26	Y26	W26	V26	U26	T26	R26	P26	N26	M26	L26	K26	J26	H26	G26	F26	E26	D26	C26	B26	A26		D31	C31	B31	A31
																											D32	C32	B32	A32
																											D33	C33	B33	A33
																											D34	C34	B34	A34
																											D35	C35	B35	A35
																											D36	C36	B36	A36
																											D37	C37	B37	A37
																											D38	C38	B38	A38
																											D39	C39	B39	A39
																											D40	C40	B40	A40